templite

AIR COOLED

Templite Ducted Split





temperzone
climate innovations

templite

Templite, R32 Inverter Ducted Split Systems

Heating Capacity
10kW - 19kW

Cooling Capacity
8.5kW - 16kW



Templite Features

templite

Templite Ducted Split units (8.5kW - 16kW)

R32

Inverter Compressor
Inverter compressor for superior part load performance

Low GWP Refrigerant
R32 refrigerant has a significantly lower GWP than R410A

Multi Speed Fans
Multi speed condenser fans for better efficiency, control, and stable operation

Electronic Expansion Valve
Electronic expansion valves (EEV) for greater control and efficiency

Intelligent Unit Controller
Ensures the unit runs at its optimum efficiency and provides system operation data

Wide Temperature Operating Range
From -15°C to +50°C ambient
*ISDT 85 & 100 units -15°C~+46°C

Splittable Indoor FCU
Can be split into two sections allowing for easier positioning and connecting during installation

Anti-Corrosive Coil Protection
Anti-Corrosive Golden Fin on the outdoor units. Passed 1000hr anti-salt spray test

Precise ESP Control
Precision control down to 1Pa ensuring optimal airflow is delivered consistently

System Run Output Signal
Built-in 12V DC output signal for activating external fresh air fans in ventilation systems

Self-Clean Indoor Coil
Removes fine particles, mould, and bacteria from the surface of the heat exchanger

BMS
BMS Adapter Accessory. Supported Protocols: BACnet & Modbus

5 YEAR Warranty
Parts and Labour
*Terms & Conditions apply





Lower Global Warming Potential Air Conditioning

Leading the way in providing low GWP commercial R32 air conditioning solutions.

Lower global warming potential

With a GWP of 677, R32 refrigerant represents a 60% reduction in overall GWP per kW of cooling or heating when compared to R410A systems (GWP 2088)*.

Reducing future costs

As higher GWP refrigerants face increasing cost due to emissions tax levies the specification of R32 systems will represent a significant reduction in the future costs associated with owning and maintaining these systems.

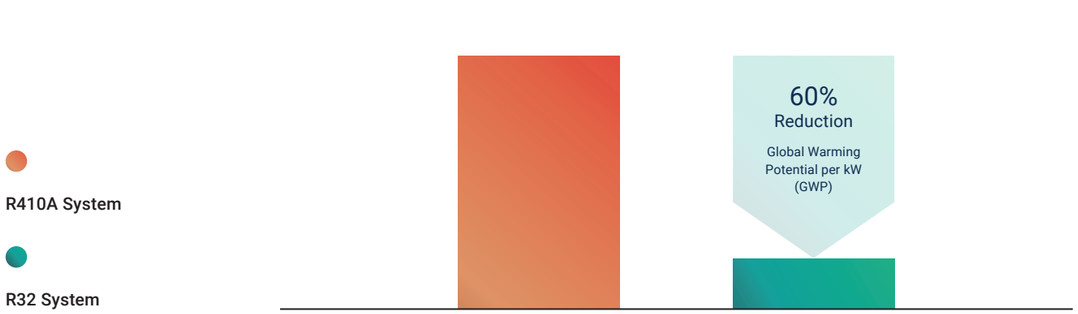



*published to AR4

Energy Saving Technology

EC Fan Technology

EC fan motors are up to 20% more energy efficient than AC motor alternatives and enable quiet operation with slow ramp-up and no sudden noise changes. Achieve precise comfort with custom select fan speeds or continuously variable fan speed control.

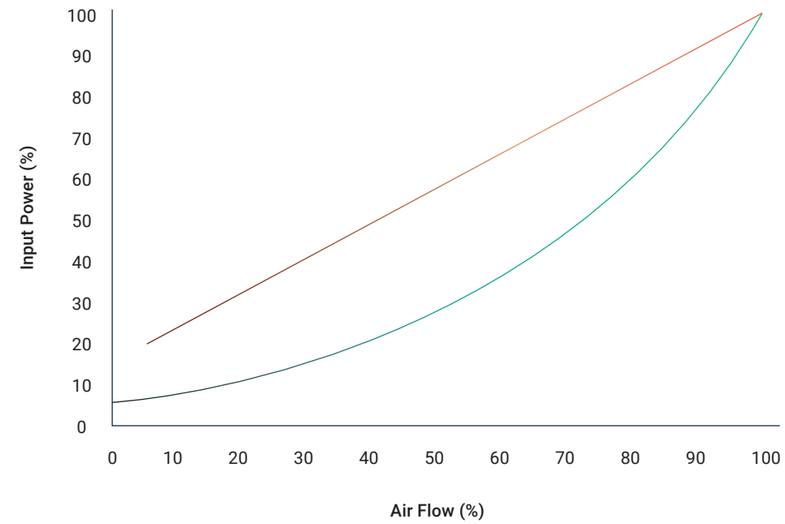

Versatile solution for offices and shops



Inverter Technology

Inverter compressor technology delivers precise control of indoor air temperatures for superior year round comfort with leading energy efficiency.

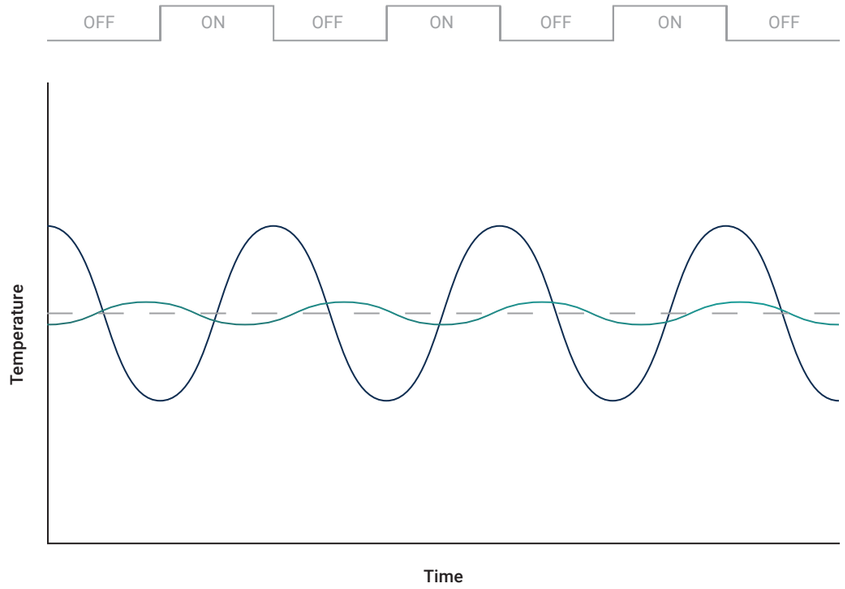

Inverter Comfort Control

Fixed speed air conditioners are single speed on/off systems. Once the desired temperature is reached, they turn off, turning back on only when the temperature drops below or rises above a set level. This cycling between full or no capacity causes unnecessary waste of electricity and doesn't maintain a constant room temperature.

The use of variable capacity inverter compressors allow a precise load variation response for superior temperature control. The use of electronic expansion valves and variable speed indoor and outdoor fans further allows a more effective, and efficient, response to varying load conditions.

Energy efficient

Inverter compressors only use the amount of energy to suit the operating condition maximising your SEER performance.

- Soft starting, using much less power at start up.
- Matching capacity to load avoids temperature fluctuation and reduces energy input power.
- Reduced amount of start/stop for long life operation.



Splittable Indoor Unit

The indoor unit can be split into two sections allowing for an easier installation while positioning and connecting the unit. This feature can minimise roof impact and simplifies the installation process.

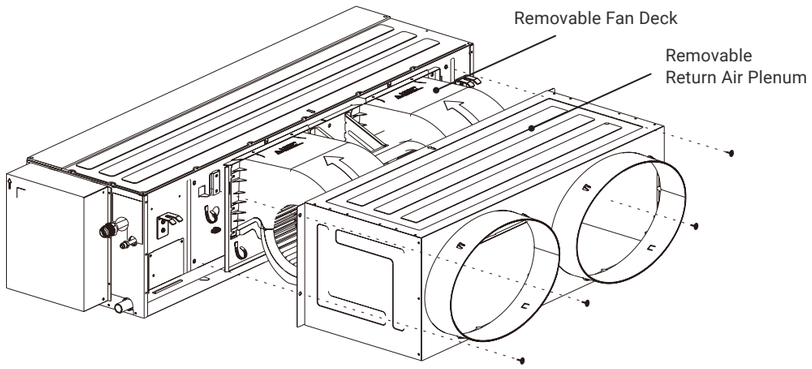

Extreme weather operation

*ISDT 85 & 100 units operate from 15°C~+46°C

Designed for the harshest conditions these Templite Ducted Split units are designed to operate in ambient temperatures from -15°C to 50°C to ensure you're always comfortable, whatever the weather.*



Self-Clean Technology

The Smart Self-Clean function enhances durability and efficiency by using an advanced frost and defrost cycle to keep your unit clean. By activating Self-Clean this avoids the unit spreading dust mould and other particles around. Enjoy superior air quality with minimal maintenance, just press a button and let the unit clean itself.





1

Dirty heat exchanger

Over time dust and dirt is trapped in the heat exchanger which leads to reduced airflow efficiency. Moisture is condensed onto the heat exchanger surface.

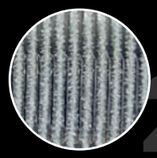

2

Frost lifts dust and dirt

Moisture is then rapidly frozen forming a layer of frost on the heat exchanger, trapping and lifting contaminants off the heat exchanger surface in the layer of frost.



3

Melt and drain the dust

Once an adequate layer of frost has been formed, the system then melts the ice, flushing away the trapped dust particles, mould and bacteria hygienically through the drain.



4

Cleaner heat exchanger

A drying cycle completes the process, leaving the coil clean and dry. A clean heat exchanger helps maintain airflow performance and keeps the air in your home cleaner.

Convenient Control



7-Day Timer Schedule

7-Day Timer Schedule allows you to schedule the system to automatically turn on and off at preset times for each day of the week. You can set up to four timer groups across the week, each with its own ON and OFF time.

Countdown ON/OFF Timers (1 to 24 hours in 1-hour increments)

Countdown ON/OFF Timer allows you to schedule the air conditioner to turn on/off automatically after a preset number of hours (1 to 24 hours in 1-hour increments). This feature is useful for conserving energy, especially during sleep or when leaving the room.

Controller Lock

Controller Lock prevents unintended changes to system settings by disabling all button operations on the wired controller. This feature is useful for avoiding accidental operation by children or unauthorised users.

Powerful Mode

Powerful mode is designed to deliver rapid cooling or heating by operating the system at maximum power. This mode is ideal for quickly adjusting the room temperature when entering a space or when immediate comfort is desired.

Silent Mode

Silent mode helps reduce noise throughout the night when trying to sleep.

Sleep Mode

Sleep mode enhances comfort during sleep by gradually adjusting the temperature and reducing noise. This helps maintain a restful environment while also conserving energy. Sleep mode can be activated when the system is operating in all modes except fan only mode.

Accessories

Extended Communication Cable Option

40m communication cable between IDU and ODU. No need for cable joining for longer cable run.

BMS Integration Capability

BMS Adapter. Supported protocols: BACnet, Modbus.

Built-In Function

System Run Output Signal

Built-in 12V DC output signal for activating external fresh air fans in ventilation systems.



Templite Technical Specifications

templite



Indoor Unit	ISDT 85LY	ISDT 100LY	ISDT 130LY	ISDT 145LY	ISDT 160LY
Outdoor Unit	OSAT 85RLSFH	OSAT 100RLSFH	OSAT 130RLSFH	OSAT 145RLSFH	OSAT 160RLSFH
Capacity (kW)					
Cooling Capacity*1	8.5 (4.2~11.0)	10.0 (4.2~11.5)	13.0 (6.0~17.0)	14.5 (6.0~18.0)	16.0 (6.0~18.5)
Heating Capacity*2	10.0 (4.2~11.2)	11.0 (4.2~11.6)	15.5 (6.0~18.5)	17.0 (6.0~19.5)	19.0 (6.0~20.0)
AEER/ACOP					
AEER (Cooling)	3.32	3.28	3.55	3.52	3.31
ACOP (Heating)	3.82	3.77	4.06	3.97	3.78
TCSPF/HSPF					
TCSPF (Cooling) Commercial/ Residential – Hot	5.269 / 4.892	5.182 / 4.819	4.859 / 4.563	4.962 / 4.655	4.729 / 4.432
TCSPF (Cooling) Commercial/ Residential – Average	5.423 / 4.569	5.334 / 4.521	4.891 / 4.241	5.011 / 4.337	4.799 / 4.150
TCSPF (Cooling) Commercial/ Residential – Cold	5.850 / 4.816	5.756 / 4.775	5.192 / 4.355	5.335 / 4.479	5.119 / 4.300
HSPF (Heating) Commercial/ Residential – Hot	4.521 / 4.517	4.512 / 4.508	4.422 / 4.431	4.222 / 4.231	4.065 / 4.072
HSPF (Heating) Commercial/ Residential – Average	4.184 / 3.946	3.961 / 3.531	4.206 / 4.087	4.029 / 3.927	3.863 / 3.744
HSPF (Heating) Commercial/ Residential – Cold	3.563 / 3.355	3.280 / 2.975	3.812 / 3.607	3.665 / 3.480	3.401 / 3.309
Power					
Power Supply*3	1 Phase 220-240V~,50Hz				
Run Amps Total System (A/ph) – Cooling (A)	11.4	13.6	16.2	18.3	21.2
Run Amps Total System (A/ph) – Heating (A)	11.5	13.0	16.9	19.0	21.0
Max Run Amps - Total System (A/ph)	19.0		31.0		
Compressor					
Type	DC Inverter				
Refrigerant	R32				
Indoor Air Fans					
Type	Forward Curved				
Motor	EC Fan				

Notes:

*1 Cooling Capacity at AS/NZS 3823 includes an allowance for indoor fan motor heat loss.

*2 Heating Capacity at AS/NZS 3823 conditions.

*3 Power source includes voltage limits.

Materials and specifications are subject to change without notice due to the manufacturer's ongoing research and development programme.



Indoor Unit	ISDT 85LY	ISDT 100LY	ISDT 130LY	ISDT 145LY	ISDT 160LY
Outdoor Unit	OSAT 85RLSFH	OSAT 100RLSFH	OSAT 130RLSFH	OSAT 145RLSFH	OSAT 160RLSFH
Airflow					
H/M/L (l/s)	800/640/555	1020/810/710	1120/920/780		
External Static Pressure Range (Pa)	30 ~ 250				
Sound (db[A])					
Indoor Sound Pressure Level (H/M/L)	50/47/44	56/53/49	58/55/51		
Outdoor Sound Pressure Level (Cooling)	60	62			
Installation					
Liquid Side/Gas Side (mm)	9.52/15.88 (flared)				
Max Pipe Length (m)	50	75			
Max Height Difference (m)	30				
Chargeless (m)	20	30			
Operating Range					
Cooling	-10°C to 46°C	-10°C to 50°C			
Heating	-15°C to 24°C				
Overall Dimensions (mm)					
Indoor - W x H x D	1520x360x820				
Outdoor - W x H x D	900×750×340	975×1460×330			
Weight (kg)					
Nett - Indoor / Outdoor	60.0 / 57.5	66.0 / 98.0			

temperzone
climate innovations

temperzone.com

Australia
nswsales@temperzone.com
sasales@temperzone.com
qldsales@temperzone.com
vicsales@temperzone.com

New Zealand
nzsales@temperzone.com

Singapore
sales@temperzone.com.sg

The specifications of this catalogue may change without prior notice to allow Temperzone to incorporate the latest innovations for its customers. The information contained in the catalogue is merely informative. Temperzone declines any responsibility in the broadest sense, for damage direct or indirect, arising from the use and / or interpretation of the recommendations in this catalogue.

TEM11/26

Australia	
Sydney	02 – 8822 5700
Adelaide	08 – 8115 2111
Brisbane	07 – 3308 8333
Melbourne	03 – 8769 7600

Distributors	
Newcastle	02 – 4962 1155
Perth	08 – 6399 5900
Launceston	03 – 6331 4209

New Zealand	
Auckland	09 – 279 5250
Hamilton	07 – 839 2705
Wellington	04 – 569 3262
Christchurch	03 – 379 3216

Asia	
Singapore	65 – 6733 4292
Shanghai	21 – 5648 2078

FSC www.fsc.org
MIX
Paper from responsible sources
FSC® C148014